VLSI Design and Testing(BEC602)

Circuit Characterization and Performance Estimation

1 Introduction

- An MOS structure is created by superimposing multiple layers of conducting, insulating, and transistor-forming materials.
- A conventional silicon gate MOS device consists of a **gate-forming region** and a **source/drain-forming region**, which includes diffusion, polysilicon, and metal layers separated by insulating layers.
- Each of these layers exhibits **resistance** and **capacitance**, which are fundamental in determining the performance of a circuit or system.
- While these layers also have inductive characteristics, for simplicity, we assume their effects to be negligible.
- We will focus on developing simple models to analyze system behavior and estimate key performance metrics such as **signal delays** and **power dissipation**.
- These models help in understanding the design and optimization of MOS circuits.
- The key areas to be considered are
  1. **Resistance and Capacitance Calculations**
     - Each layer in an MOS structure has a specific resistance and capacitance.
     - These parameters impact signal integrity and circuit speed.
  2. **Delay Estimations**
     - Delays arise due to the resistance-capacitance (RC) time constant of interconnects.
     - Understanding delays is essential for high-speed circuit design.
  3. **Determination of Conductor Size for Power and Clock Distribution**
     - Proper conductor sizing ensures minimal power loss and maintains signal integrity.
     - Efficient clock distribution minimizes skew and ensures synchronization across the circuit.
  4. **Power Consumption**
     - Includes both **dynamic power** and **static power**.
     - Optimization is necessary for energy-efficient circuit design.
  5. **Charge Storage Mechanism**
     - MOS capacitors store charge, playing a crucial role in logic transitions and memory operations.

6. **Effects of Scaling**
   - As MOS devices scale down, resistance, capacitance, and power consumption change.
   - Scaling impacts device performance and requires careful consideration in design.

- By understanding these concepts, we can develop accurate models to optimize MOS circuits for improved performance and efficiency.

2 Resistance Estimation

2.1 Sheet Resistance

The resistance R of a uniform slab of conducting material is given by:

$$R = \left(\frac{\rho}{t}\right)\left(\frac{l}{w}\right) \quad \text{(ohms)} \tag{1}$$

where:

- ρ = resistivity of the material,
- t = thickness of the conductor,
- l = conductor length,
- w = conductor width.

This equation can be rewritten using **sheet resistance** R_s (measured in ohms per square) as:

$$R = R_s\left(\frac{l}{w}\right) \quad \text{(ohms)} \tag{2}$$

Thus, the resistance of a thin conducting layer can be calculated by multiplying the sheet resistance R_s by the length-to-width ratio of the conductor.

Consider the following figure:

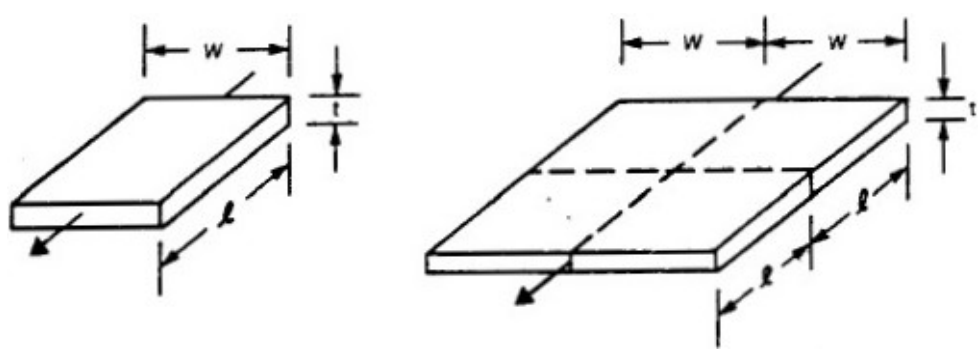

Figure 1: Determination of layer resistance

- **For smaller conductor**

$$R = R_s \left(\frac{l}{w}\right) \Omega$$

- **For bigger conductor**

$$\begin{aligned} R &= R_s \left(\frac{4l}{4w}\right) \\ &= R_s \left(\frac{l}{w}\right) \Omega \end{aligned}$$

This illustrates how different conductor geometries can have the same resistance if their length-to-width ratios are equivalent. This demonstrates the utility of sheet resistance in simplifying resistance calculations.

2.1.1 Typical Sheet Resistance Values

- Table below presents typical sheet resistances for materials used in 3μm to 5μm MOS processes.

Table 1: Typical Sheet Resistances for Conductors

Material	**Min (Ω)/sq)**	**Typical (Ω/sq)**	**Max (Ω/sq)**
Metal (Al)	0.03	0.05	0.08
Silicides	2	3	6
Diffusion (n+ and p+)	10	25	50
Polysilicon	15	50	100

- For metals, the resistivity is primarily determined by material properties.
- However, for **polysilicon and diffusion layers**, the resistivity varies based on the doping concentration introduced during implantation.
- Accurate resistance estimation requires knowledge of **process parameters**.

2.2 Channel Resistance in MOS Transistors

- Although the voltage-current characteristics of an **MOS transistor** are nonlinear, an approximate **channel resistance** can be used for performance estimation.
- The channel resistance R_c in the **linear region** is:

$$R_c = k\left(\frac{L}{W}\right) \tag{3}$$

where:

$$k = \left[\mu\left(\frac{\epsilon_0 \epsilon_r}{t_{ox}}\right)(V_{gs} - V_t)\right]^{-1} \tag{4}$$

For both **n-channel and p-channel MOSFETs**, k typically ranges from 5,000 to 30,000 Ω/sq.

- The above equation shows that channel resistance depends on the **surface mobility** of majority carriers (electrons in n-MOS, holes in p-MOS).
- Since mobility is a **temperature-dependent parameter**, the channel resistance and consequently **switching time and power dissipation** vary with temperature.
- The resistance increases by approximately +0.25% per °C above 25°C.

2.3 Resistance of Non-Rectangular Regions

- In **VLSI layouts**, conducting paths often take **non-rectangular** shapes, such as bends or junctions.
- The resistance of such regions is more complex to calculate than for simple rectangles.
- A **common approach** is to divide a complex shape into **simpler rectangular sections** and calculate resistance accordingly.
- Figure below presents standard resistance values for commonly encountered VLSI layout shapes.

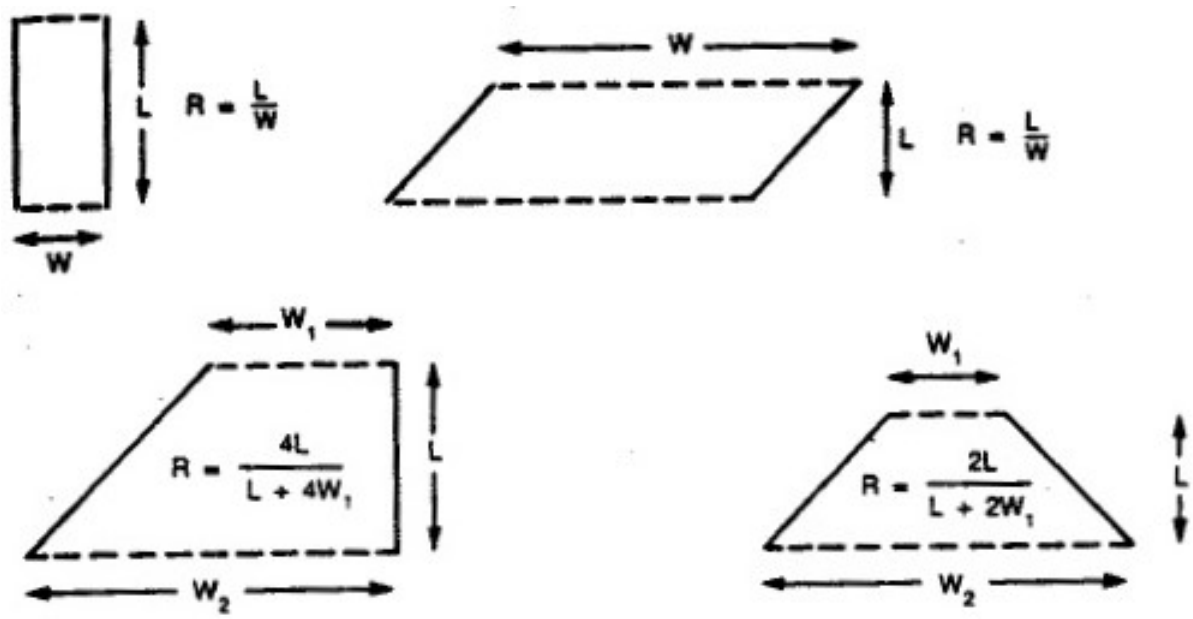

Figure 2: Resistance of commonly encountered shapes.

- These values serve as useful approximations when designing complex circuits.
- Figure below illustrates practical layout geometries encountered in integrated circuit design.

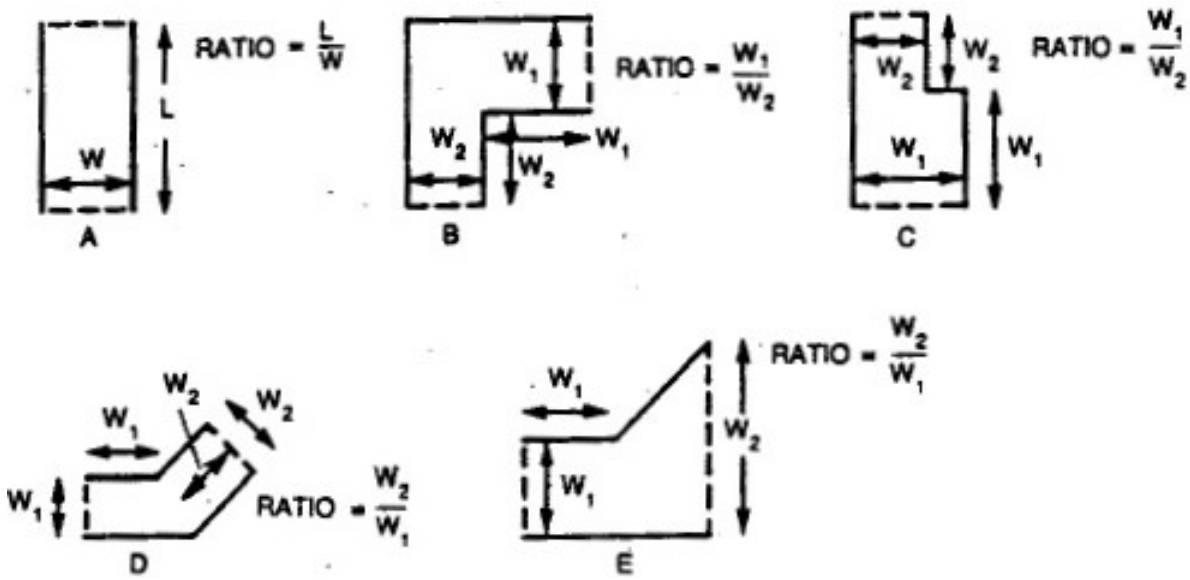

Figure 3: Examples of non-rectangular layout shapes in practical VLSI designs.

- These shapes often require careful estimation of resistance due to their irregular dimensions.
- Table below presents resistance values for commonly encountered layout shapes.

Table 2: Resistance of Non-Rectangular Shapes

Shape	**Ratio**	**Resistance (Ω)**
A	1	1
A	5	5
B	1	2.5
B	1.5	2.55
B	2	2.6
B	3	2.75
C	1.5	2.1
C	2	2.25
C	3	2.5
C	4	2.65
D	1	2.2
D	1.5	2.3
D	2	2.3
D	3	2.6
E	1.5	1.45
E	2	1.8
E	3	2.3
E	4	2.65

- These values can also be used to estimate the **effective W/L ratio** for **irregular MOS transistors**.
- However, special attention must be given to the placement of the **source and drain** in such layouts.

2.4 Contact and Via Resistance

- Contacts and vias also introduce resistance, which increases as their size decreases.
- **Typical values** for modern processes range from 0.25 Ω to 100 Ω.
- Careful design is required to minimize resistance and ensure proper signal transmission.

2.5 Key Takeaways

1. **Resistance Calculation:**
   - For rectangular conductors: $R = R_s(l/w)$.
   - For MOSFET channels: $R_c = k(l/w)$.
2. **Process Dependency:**
   - Metal resistance is **fixed**, while diffusion and polysilicon resistance depend on **dopant concentration**.
   - Channel resistance varies with **temperature** (+0.25% per °C).
3. **Non-Rectangular Resistance:**
   - Divide complex shapes into **simpler regions** for easier calculation.
   - Effective **W/L ratio** must be carefully estimated for non-rectangular MOSFETs.
4. **Contacts and Vias:**
   - Have non-negligible resistance, which increases with decreasing size.

These principles are essential for **accurate resistance estimation** in VLSI design and layout.

3 Capacitance Estimation

- The dynamic response of MOS systems, particularly the switching speed, is significantly influenced by the parasitic capacitances associated with MOS devices and interconnections.
- These capacitances arise from metal, polysilicon, and diffusion wires (often referred to as "runners") in combination with transistor and conductor resistances.
- The total load capacitance at the output of an MOS gate consists of the following components:
  1. **Gate Capacitance**: Due to other inputs connected to the output of the gate.

2. **Diffusion Capacitance**: Arises from the drain regions connected to the output.
3. **Routing Capacitance**: Results from the connections between the output and other inputs.

- Understanding the sources and variations of these parasitic loads is crucial in MOS circuit design, where system performance is largely dictated by switching speed.
- To analyze this, we first examine the characteristics of an MOS capacitor before estimating the MOS transistor gate capacitance, source/drain capacitance, and routing capacitance.

3.1 MOS Capacitor Characteristics

- The capacitance-voltage characteristics of an MOS structure depend on the state of the semiconductor surface. As the gate voltage (V_G) varies, the surface can be in one of the following three states:
  1. Accumulation
  2. Depletion
  3. Inversion
- Figure below illustrates the MOS structure.

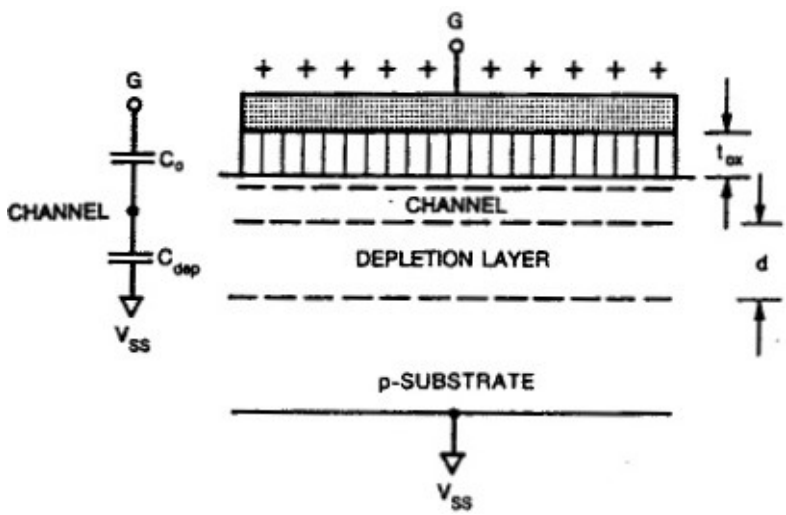

Figure 4: MOS capacitor structure

3.1.1 Accumulation Mode

- In a **p-substrate MOS capacitor**, an accumulation layer forms when $V_G < 0$ (for an **n-substrate**, this occurs when $V_G > 0$).
- The negative charge on the gate attracts holes to the silicon surface, forming a high concentration of charge carriers.
- Under these conditions, the MOS structure behaves like a **parallel plate capacitor**, where:

  - The **gate conductor** forms one plate.
  - The **accumulated hole layer** in the p-substrate (or electron layer in an n-substrate) forms the second plate.

- Since the accumulation layer is directly connected to the substrate, the gate capacitance can be approximated as:

$$C_o = \frac{\epsilon_{SiO_2}\epsilon_o}{t_{ox}}A \tag{5}$$

  where:

  - A = area of the gate
  - $\epsilon_{SiO_2} = 3.9$, the relative permittivity of ϵ_{SiO_2}

3.1.2 Depletion Mode

- When a small positive voltage is applied to an **n-device** gate with respect to the p-substrate, a **depletion layer** forms.
- The positive gate voltage repels holes, leaving behind a negatively charged region depleted of carriers.
- A similar effect occurs in an **n-substrate device** for a small negative gate voltage.
- The charge density per unit area in the depletion region depends on:
  - Doping concentration (N)
  - Electronic charge (q)
  - Depletion layer depth (d)
- As the gate-to-substrate voltage increases, the depletion depth (d) also increases, causing a decrease in capacitance.
- The depletion capacitance is given by:

$$C_{dep} = \frac{\epsilon_o\epsilon_{si}}{d}A \tag{6}$$

  where:

  - d = depletion layer depth
  - $\epsilon_{si} = 12$, the dielectric constant of silicon

- Since the depletion capacitance is in **series** with the gate oxide capacitance, the total capacitance in depletion mode is:

$$C_{gb} = \frac{C_o C_{dep}}{C_o + C_{dep}} \tag{7}$$

- This equation shows that as d increases, the total gate-to-substrate capacitance decreases.

3.1.3 Inversion Mode

- As the gate voltage increases further, minority carriers (electrons for a p-substrate) accumulate at the surface, forming an **inversion layer** that effectively turns the surface into an **n-type channel**.
- This results in a high-conductivity layer under the gate.
- At **low frequencies** (< 100 Hz), the capacitance **returns to** C_o.
- At **higher frequencies**, the **limited supply of minority carriers** prevents the charge from following rapid gate voltage variations. Consequently, the **dynamic capacitance remains at the depletion value**, given by:

$$C_{gb} = C_o, \quad \text{for low frequency } (<100 \text{ Hz}) \tag{8}$$

$$C_{gb} = \frac{C_o C_{dep}}{C_o + C_{dep}}, \quad \text{for dynamic conditions} \tag{9}$$

- Figure below illustrates the variation of dynamic gate capacitance as a function of gate voltage.

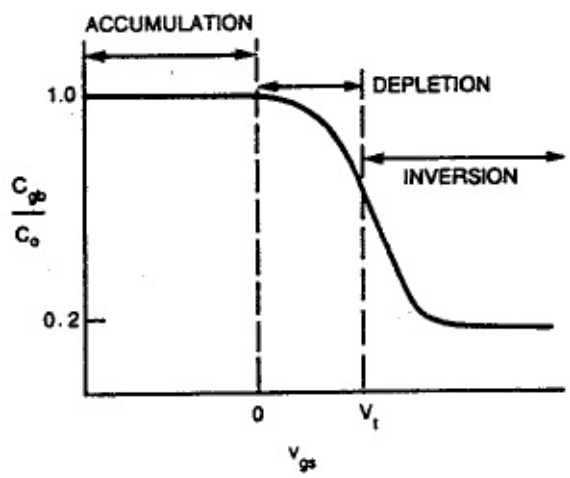

Figure 5: MOS capacitance variation as a function of V_{gs}

3.2 MOS Device Capacitances

- So far, we have considered the MOS gate in isolation.
- However, in practical MOS transistors, several parasitic capacitances exist due to the physical structure of the device.
- Figure below presents a diagrammatic representation of these parasitic capacitances.
- For simplicity, we assume that the overlap of the gate over the drain and source is negligible.
- This is a valid first-order approximation in self-aligned silicon gate processes.

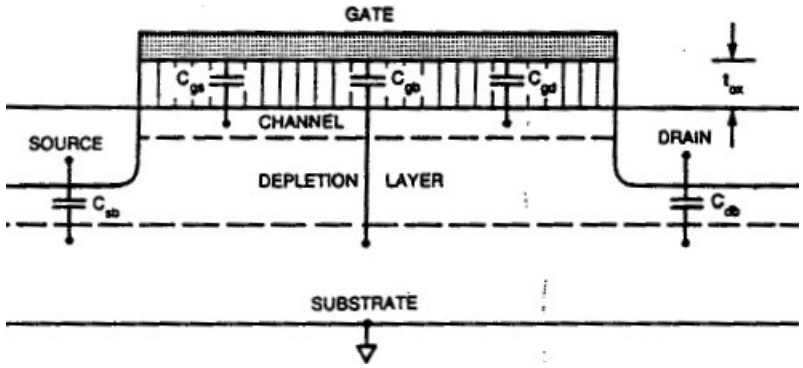

Figure 6: Representation of parasitic capacitance for an MOS transistor

3.2.1 Capacitive Components in MOS Transistor

The following capacitances are identified:

- C_{gs} and C_{gd}: Gate-to-channel capacitances, which are lumped at the source and drain regions of the channel.
- C_{sb} and C_{db}: Source and drain diffusion capacitances to the bulk (or substrate).
- C_{gb}: Gate-to-bulk capacitance.

It is possible to represent this model using circuit symbols, as shown in figure below.

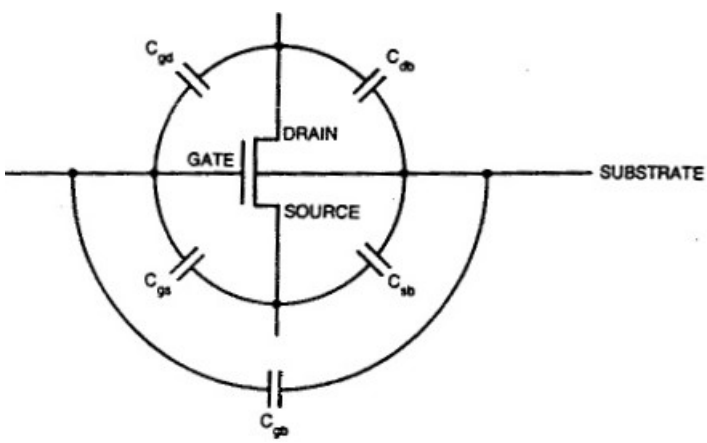

Figure 7: Circuit symbols for parasitic capacitance

The total gate capacitance (C_g) of an MOS transistor is given by:

$$C_g = C_{gb} + C_{gs} + C_{gd}$$

3.2.2 Gate Capacitance in Different Operating Regions

- The behavior of the gate capacitance depends on the region of operation of the MOS transistor.
- The capacitance values can be approximated using simple models in each region:

1. **Off Region** ($V_{GS} < V_t$):
   - When the MOS transistor is "OFF", there is no conducting channel, meaning $C_{gs} = C_{gd} = 0$.
   - The gate-to-bulk capacitance (C_{gb}) can be modeled as the series combination of the gate oxide capacitance (C_o) and the depletion capacitance (C_{dep}), as discussed earlier.
2. **Linear Region** ($V_{GS} > V_t$, $V_{DS} < V_{GS} - V_t$):
   - In this region, the depletion layer depth remains relatively constant.
   - Consequently, C_{gb} remains constant.
   - As a conducting channel forms, the gate-to-channel capacitances C_{gs} and C_{gd} become significant.
   - These capacitances depend on the gate voltage and can be estimated as:

$$C_{gs} \approx C_{gd} \approx \frac{1}{2}C_o \approx \frac{1}{2}\left(\frac{\epsilon_{SiO_2}\epsilon_o}{t_{ox}}\right)A$$

3. **Saturation Region** ($V_{GS} > V_t$, $V_{DS} > V_{GS} - V_t$):
   - In this region, the channel is heavily inverted, and the drain end of the channel is pinched off.
   - This causes C_{gd} to be approximately zero, while C_{gs} increases to:

$$C_{gs} \approx \frac{2}{3}C_o \approx \frac{2}{3}\left(\frac{\epsilon_{SiO_2}\epsilon_o}{t_{ox}}\right)A$$

The behavior of the input capacitances in the three regions of operation is summarized in table below.

Table 3: Approximation of intrinsic MOS gate capacitance in different regions.

Parameter	**Off Region**	**Linear Region**	**Saturation Region**
C_{gb}	$\frac{\epsilon A}{t_{ox}}$	0	0
C_{gs}	0	$\frac{1}{2}\left(\frac{\epsilon A}{t_{ox}}\right)$	$\frac{2}{3}\left(\frac{\epsilon A}{t_{ox}}\right)$
C_{gd}	0	$\frac{1}{2}\left(\frac{\epsilon A}{t_{ox}}\right)$	0
$C_g = C_{gb} + C_{gs} + C_{gd}$	$\frac{\epsilon A}{t_{ox}}$	$\frac{\epsilon A}{t_{ox}}$	$\frac{2}{3}\left(\frac{\epsilon A}{t_{ox}}\right)$

3.2.3 Effect of Gate Overlap

- If the gate overlaps the drain and source (as in a metal gate process), then a fixed parasitic capacitance due to the overlap area and separation must be added to C_{gs} and C_{gd}.

- Despite the voltage dependence of some capacitance components, the overall gate capacitance (C_g) for an n-device is approximately equal to the intrinsic "gate-oxide" capacitance (C_o) for all gate voltage values, except near the threshold voltage (V_t), as illustrated in figure below.

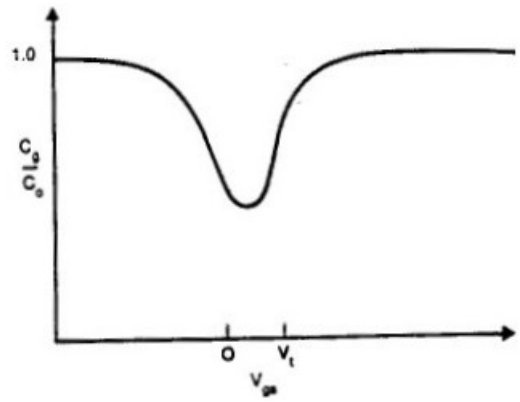

Figure 8: Total gate capacitance as a function of V_{gs}

- Since transistors in digital circuits transition through this threshold region rapidly, a conservative approximation is:

$$C_g \approx C_{ox}A$$

where C_{ox} is the "thin oxide" capacitance per unit area, given by:

$$C_{ox} = \frac{\epsilon_{SiO_2}\epsilon_0}{t_{ox}}$$

- For a thin-oxide thickness in the range of 500 – 1000 Å and a relative permittivity of SiO_2 ($\epsilon_{SiO_2} = 4$), the capacitance per unit area is:

$$C_{ox} = \frac{4 \times 8.854 \times 10^{-14}}{(500 \text{ to } 1000) \times 10^{-8}} \approx (8 \text{ to } 4) \times 10^{-4} pF/\mu m^2.$$

3.3 Diffusion Capacitance

- In MOSFETs, the source and drain regions are formed by shallow n^+ and p^+ diffusions.
- These diffusion regions also act as interconnects in some layouts.
- All diffusion regions have capacitance to the substrate (or well), known as **diffusion capacitance** (C_d).
- C_d arises due to the reverse-biased junction between diffusion and substrate.
- It depends on:
  - Voltage across the junction (V_j)
  - Area of the depletion region:
    - Base area (horizontal)
    - Sidewall area (vertical, due to diffusion depth)

3.3.1 Capacitance Model

Let:

- C_{ja} = Capacitance per unit area (pF/μm^2)
- C_{jp} = Capacitance per unit periphery (pF/μm)
- a = Width of diffusion region (μm)
- b = Length of diffusion region (μm)

Then the total diffusion capacitance is:

$$C_d = C_{ja}(ab) + C_{jp}(2a + 2b)$$

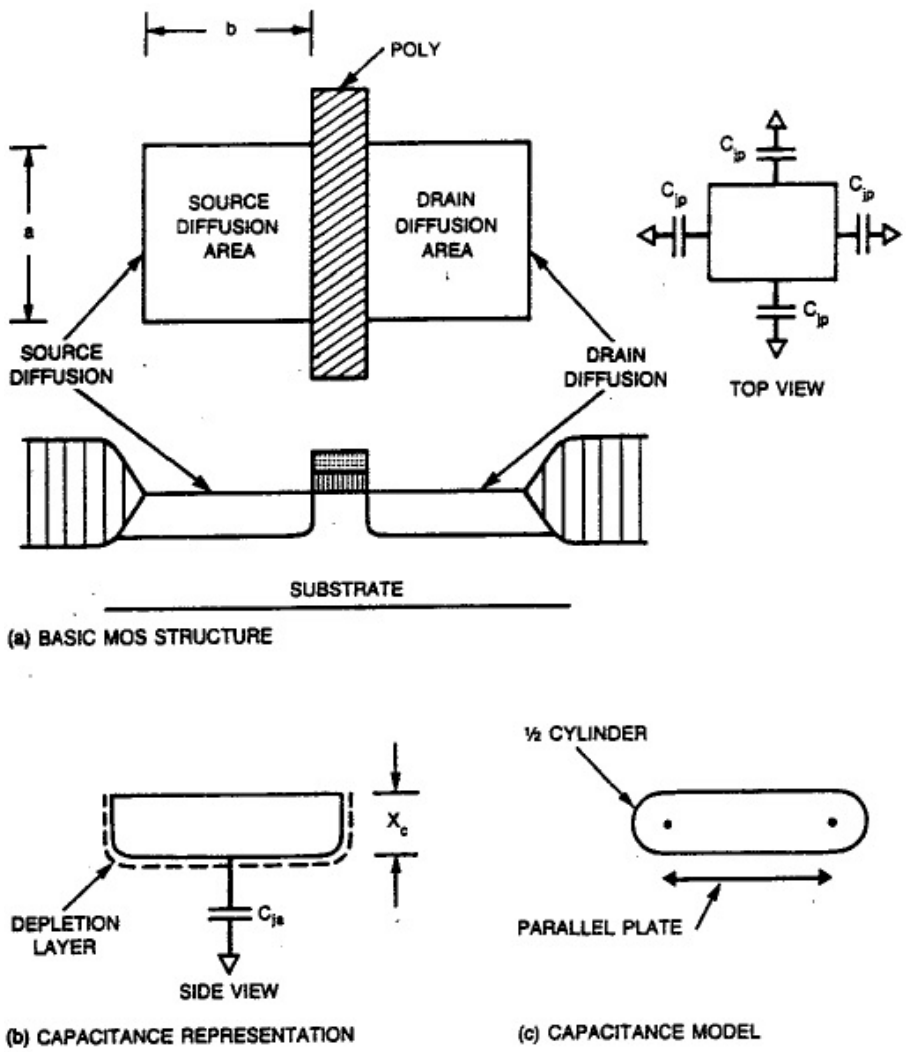

Figure 9: Area and peripheral components of diffusion capacitance

Note: As dimensions scale down, the peripheral (sidewall) capacitance becomes increasingly significant.

Example Calculation

Given:

$$C_{ja} = 1 \times 10^{-4}\,\text{pF}/\mu\text{m}^2, \quad C_{jp} = 9 \times 10^{-4}\,\text{pF}/\mu\text{m}$$
$$a = 10\,\mu\text{m}, \quad b = 8\,\mu\text{m}$$
$$C_d = (1 \times 10^{-4})(10 \times 8) + (9 \times 10^{-4})[(2 \times 10) + (2 \times 8)]$$
$$= 8 \times 10^{-3} + 32.4 \times 10^{-3} = \boxed{40.4\,\text{fF}}$$

3.3.2 Voltage Dependence

The junction capacitance varies with junction voltage V_j:

$$C_j = \frac{C_{j0}}{\left(1 - \frac{V_j}{\Phi_B}\right)^m}$$

Where:

- C_{j0} = Zero-bias capacitance
- Φ_B = Built-in potential (≈ 0.6 V)
- m = Grading coefficient (typically 0.3 to 0.5)
- V_j = Junction voltage (negative for reverse bias)

Typical Values

Table 4: Typical diffusion capacitance values

Device Type	C_{ja} (pF/μm^2)	C_{jp} (pF/μm)
n-device / wire	1×10^{-4}	9×10^{-4}
p-device / wire	1×10^{-4}	8×10^{-4}

3.4 Routing Capacitance

- Routing capacitance arises between interconnect layers (e.g., metal, poly) and the substrate or other layers.
- It is crucial in estimating interconnect delay and dynamic power consumption.

3.4.1 Parallel Plate Model Approximation

Capacitance between layers can be estimated using the parallel-plate capacitor model:

$$C = \varepsilon \frac{A}{t}$$

Where:

- C = Capacitance (F)
- ε = Dielectric constant of the insulating material
- A = Overlapping area of the plates
- t = Thickness of the dielectric (insulator)

Limitations of the Model

- The parallel-plate model **ignores fringing fields**.
- **Fringing fields** increase the effective area and hence increase the capacitance.
- Actual capacitance can be up to twice than predicted.
- Interlayer capacitance (e.g., metal-to-poly) is also enhanced by fringing effects.

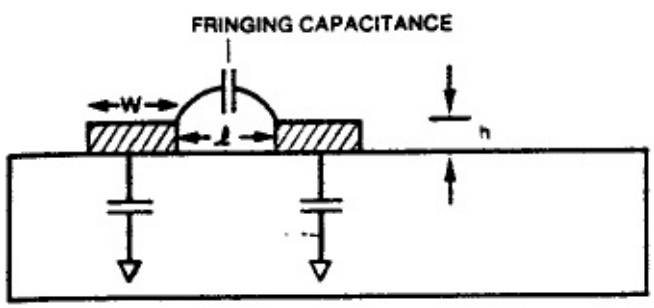

Figure 10: Effect of fringing fields on capacitance

Scaling and Fringing

- With technology scaling, wire widths (w) and heights reduce *less* than separations (l).
- Thus, fringing fields become more prominent in deep submicron technologies.
- A fringing factor between **1.5 and 3** is typically used in modern processes.

3.4.2 Physical Layout vs. Drawn Layout

- Another source of error in capacitance estimation arises from differences between the **drawn layout** (on mask) and the **actual fabricated geometry**.
- This is particularly pronounced for diffusion regions.
- The difference can be modeled:
  - Analytically (using process parameters)
  - Empirically (using experimental data)

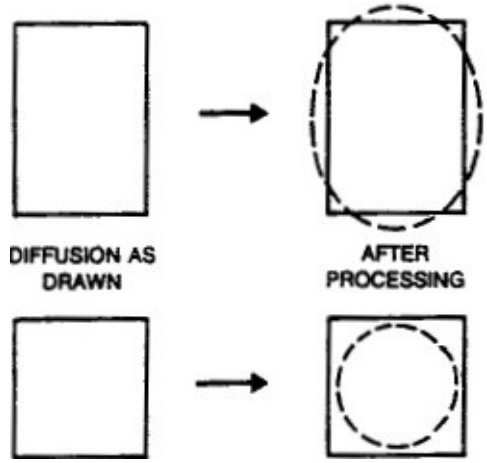

Figure 11: Effect of processing on drawn geometry

3.5 Distributed RC Effects

- Long interconnect wires exhibit distributed resistance and capacitance.
- This leads to signal delay that cannot be accurately modeled by lumped RC alone.
- This is especially critical for long polysilicon lines due to their high resistivity.

3.5.1 Modeling with Distributed RC

A long wire can be modeled as a chain of small RC sections as shown in figure below.

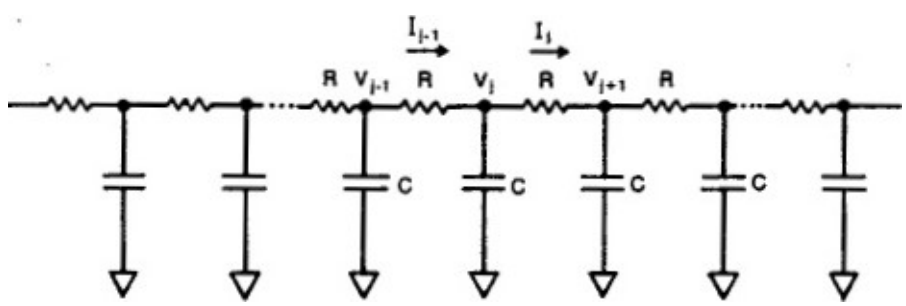

Figure 12: Representation of long wire in terms of distributed RC sections

For node voltage V_i, the differential equation is:

$$rc\frac{dV}{dt} = \frac{d^2V}{dx^2}$$

Where:

- r = resistance per unit length
- c = capacitance per unit length
- x = distance from the input

This is the well-known **diffusion equation**.

3.5.2 Delay Estimation

1. Step Response Delay: Propagation time for a step input over wire of length l is:

$$t_x = k \cdot l^2$$

2. Discrete RC Chain Approximation: For n RC sections:

$$t_n = \frac{RC\ \mathrm{n}(n+1)}{2}$$

As n becomes very large (i.e., the individual sections become very small), this reduces to:

$$t_l = \frac{rc \cdot l^2}{2}$$

Example: 2 mm Poly Bus

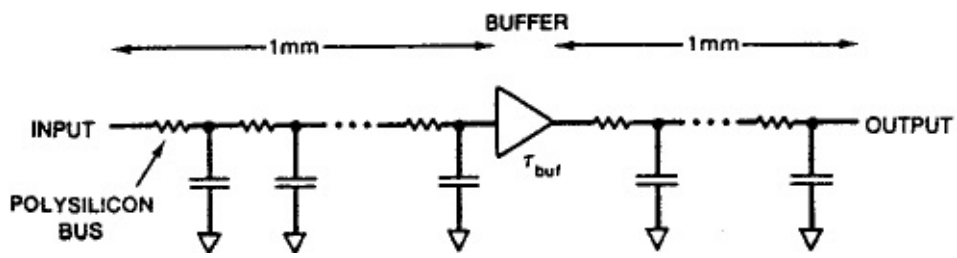

Figure 13: Segmentation of polysilicon line

Given:

- $r = 12\ \Omega/\mu m$
- $c = 4 \times 10^{-4}\ pF/\mu m$
- $l = 1000\ \mu m$

$$t_p = \frac{rc \cdot l^2}{2} = 2.4 \times 10^{-13} \cdot l^2 = 2.4\ ns$$

With a buffer delay t_{buf}, the total delay for two segments:

$$t_{p,\text{seg}} = 2.4\ ns + t_{buf}$$

Without segmentation (i.e., full 2 mm wire):

$$t_p = 9.6\ ns$$

Optimization Techniques

- **Segmentation**: Break the line and insert buffers to reduce delay.
- **Wider Poly**: Reduces r, increases c—may be useful in some cases.
- **Use Metal Instead of Poly**: Second metal layer can replace high-r poly for long connections.
- **Silicides**: Use of low-resistance materials like molybdenum or tantalum (2–4 Ω/sq).

3.5.3 Compact RC Model

- Compact RC Model is shown in figure below.

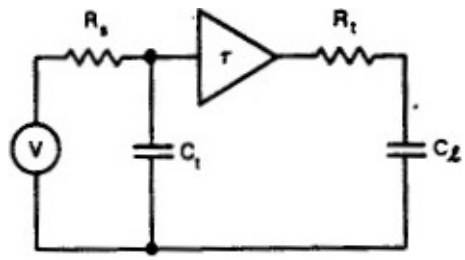

Figure 14: Simple model for RC delay calculation

- It includes:
  - R_s: Driver output resistance
  - C_l: Receiver input capacitance
  - R_t, C_t: Lumped line resistance and capacitance
- This model yields results that are very economical in terms of computation and, more importantly, are accurate enough for most purposes.
- The concept of using RC time constants for delay estimations is based upon the assumption that the time taken for a signal to reach 63 % of its final value approximates the switching point of an inverter.

3.6 Capacitance Design Guide

- Accurate estimation of parasitic capacitances is crucial in digital VLSI design because **interconnect and device capacitances directly influence propagation delays, power consumption, and circuit performance**.
- To assist in design planning, standard capacitance values for a typical $\lambda = 2\,\mu$m CMOS process are provided in following table.

Table 5: Typical 4 μm silicon gate CMOS process capacitances

Parameter	Description	Min Capacitance	Max Capacitance
C_g(pF/μm^2)	Gate oxide capacitance	4.0×10^{-4}	5.0×10^{-4}
C_p(pF/μm^2)	Polysilicon over field	0.4×10^{-4}	0.6×10^{-4}
C_{mp}(pF/μm^2)	Metal over poly	0.4×10^{-4}	0.6×10^{-4}
C_{mf}(pF/μm^2)	Metal over field	0.15×10^{-4}	0.3×10^{-4}
C_{md}(pF/μm^2)	Metal over diffusion (n and p)	0.8×10^{-4}	1.0×10^{-4}
C_{jan}(pF/μm^2)	n-diffusion capacitance	0.8×10^{-4}	1.0×10^{-4}
C_{jap}(pF/μm^2)	p-diffusion capacitance	0.8×10^{-4}	1.0×10^{-4}
C_{jpn}(pF/μm)	Gate capacitance (n-channel)	7.0×10^{-4}	9.0×10^{-4}
C_{jpp}(pF/μm)	Gate capacitance (p-channel)	6.0×10^{-4}	8.0×10^{-4}

- Capacitance of second-level metal layers is governed by planarization layer thickness.
- **Fringing fields are negligible** in current technologies.

Table 6: Typical 4 μm second level metal CMOS process capacitances

Parameter	**Description**	**Min Capacitance** ($pF/\mu m^2$)	**Max Capacitance** ($pF/\mu m^2$)
C_{m2f}	Metal 2 to substrate	0.1×10^{-4}	0.15×10^{-4}
C_{m2p}	Metal 2 to poly	0.2×10^{-4}	0.3×10^{-4}
C_{m21}	Metal 2 to metal 1	0.3×10^{-4}	0.5×10^{-4}

Example: Capacitance Calculation

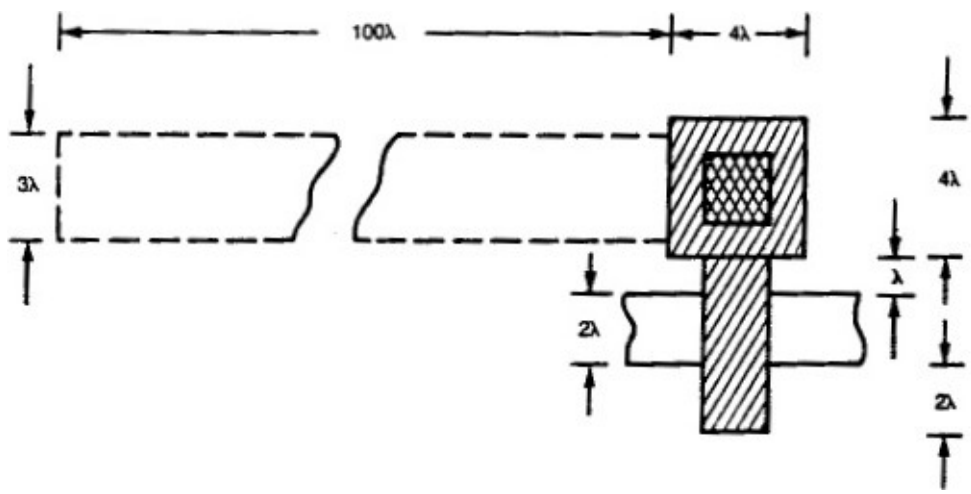

Figure 15: Example of parasitic capacitance calculatlon for $\lambda = 2\,\mu$m

Assume $\lambda = 2\,\mu$m. Compute parasitic capacitances:

- **Metal line over field:**

$$C_{mf} = (3\lambda \times 100\lambda) \cdot 0.3 \times 10^{-4} = 0.036\,\text{pF}$$

- **Polysilicon line:**

$$C_p = [(4\lambda \times 4\lambda) + (\lambda + 2\lambda) \times 2\lambda] \cdot 0.6 \times 10^{-4} = 0.0053\,\text{pF}$$

- **Gate area:**

$$C_g = (2\lambda \times 2\lambda) \cdot 5.0 \times 10^{-4} = 0.008\,\text{pF}$$

- **Total capacitance:**

$$C_T = C_{mf} + C_p + C_g = 0.036 + 0.0053 + 0.008 = 0.049\,\text{pF}$$

Design Insight

Before completing a detailed layout, designers should have **ballpark estimates** of capacitance values to:

- Estimate **bus loading** and **fan-out** requirements.
- Perform early-stage **timing and delay analysis**.
- Choose suitable wire widths, spacings, and transistor sizes.

Reference values like capacitance of:

- A unit-size gate,
- 100 μm of poly wire,
- Common metal-poly overlaps, etc.

are helpful for making quick and reasonable design decisions.

3.7 Wire Length Design Guide

- In VLSI design, signal propagation delay is an important consideration.
- For timing analysis, an **electrical node** is defined as a region of connected interconnect paths where the **RC (resistance-capacitance) delay** is **small** compared to **gate delays**.
- In such cases, the interconnect can be modeled as a **lumped capacitance** and included in the gate delay.

Key Concept

- For **short wires**, RC delays can be neglected.
- These wires act as one electrical node.
- Such wires are modeled as **simple capacitive loads** rather than distributed RC networks.

Timing Condition

To ignore RC delay, wire delay τ_w should be **much smaller** than gate delay τ_g:

$$\tau_w \ll \tau_g \tag{10}$$

Substituting the delay equation:

$$\tau_w = \frac{rc \cdot l^2}{2}$$

we get the condition on maximum wire length:

$$\frac{rc \cdot l^2}{2} \ll \tau_g$$

$\Rightarrow$

$$l \ll \sqrt{\frac{2\tau_g}{rc}} \tag{11}$$

This expression gives an **upper bound** on the wire length l where RC delay can be safely ignored.

Design Guidelines for Interconnect Length

Using above equation and assuming typical gate delays (1.5 ns – 2.0 ns) and values for **r** from table of **Typical sheet resistance for conductors** and **c** from table of **Typical 4 μm silicon gate CMOS process capacitances**, we can derive maximum allowable wire lengths in terms of λ, the design rule unit:

$$l = \sqrt{\frac{2 \cdot \tau_g}{r \cdot c}} = \sqrt{\frac{2 \cdot 2.0 \times 10^{-9}}{0.03 \cdot 0.3 \times 10^{-16}}} = \sqrt{\frac{4.0 \times 10^{-9}}{9.0 \times 10^{-18}}} = \sqrt{4.44 \times 10^8} \approx 21,066\,\lambda$$

- $\tau_g = 2.0 \times 10^{-9}$ s (typical gate delay)
- $r = 0.03\ \Omega/\lambda$ (resistance per unit length)
- $c = 0.3 \times 10^{-16}$ F/λ (capacitance per unit length)

To be conservative in practice, the maximum recommended length is chosen lower:

$$l < 20,000\lambda$$

The following table shows the guidelines for ignoring RC wire delays:

Table 7: Guidelines for Ignoring RC Wire Delays

Interconnect Layer	**Maximum Length (in λ)**
Metal	20,000
Silicide	2,000
Polysilicon	200
Diffusion	20

Key Takeaways

- **Metal interconnects** can span large distances with negligible delay.
- **Poly and diffusion wires** should be kept short to avoid RC delay.
- These rules are conservative but easy to remember and valid for most CMOS processes.
- For newer technologies, Eq.

  $$l \ll \sqrt{\frac{2\tau_g}{rc}}$$

  can be used to derive updated rules.

4 Switching Characteristics

- The switching speed of a CMOS gate is limited primarily by the time it takes to charge and discharge the load capacitance C_L.
- When an input transition occurs, the output undergoes a corresponding transition — either charging C_L toward V_{DD} or discharging it toward V_{SS}.

Key Definitions

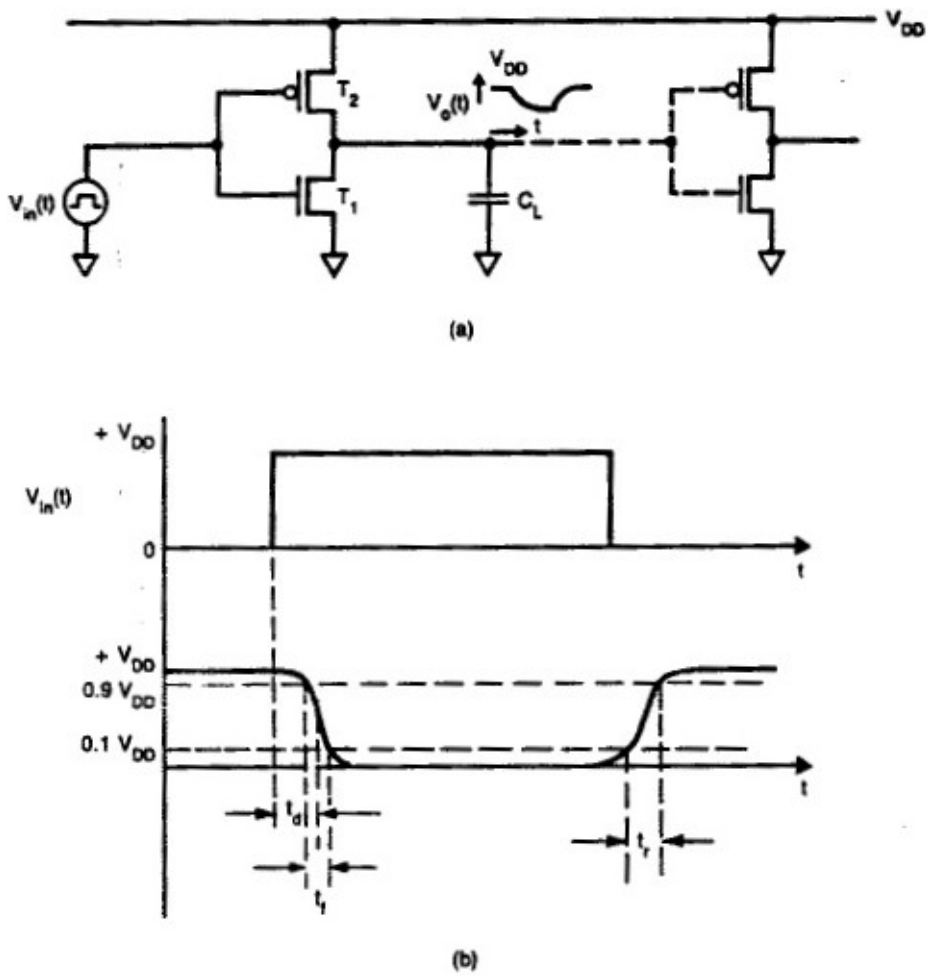

Figure 16: Switching characteristic for CMOS Inverter

Before proceeding, we define a few important timing parameters, referring to above figure:

- **Rise time (t_r)**: Time for a voltage waveform to rise from 10% to 90% of its final steady-state value.
- **Fall time (t_f)**: Time for a voltage waveform to fall from 90% to 10% of its steady-state value.
- **Delay time (t_d)**: Time difference between the 50% transition level of the input and the corresponding 50% level of the output. This represents the time for the logic transition to propagate through the gate.

Inverter with Load Capacitance

- Figure (a) shows a standard CMOS inverter driving a capacitive load C_L. This capacitance models:
  - The input capacitance of subsequent stages

  - The output capacitance of the driving gate
  - The routing (interconnect) capacitance

- The voltage response $V_o(t)$ of the output node is of primary interest when the input $V_{in}(t)$ is a step waveform, as shown in figure (b).
- The analysis of $V_o(t)$ under such conditions allows us to estimate the inverter's delay and transition behavior in practical digital circuits.

4.1 Fall time determination

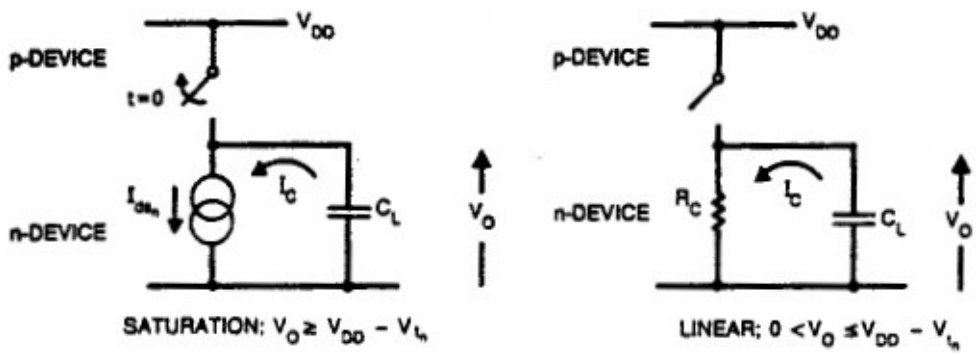

Figure 17: Equivalent circuits for fall time determination

The total fall time is given by:

$$t_f = t_{f1} + t_{f2}$$

where:

- t_{f1} is the time during which V_O drops from $0.9V_{DD}$ to $V_{DD} - V_{tn}$ (saturation region),
- t_{f2} is the time during which V_O drops from $V_{DD} - V_{tn}$ to $0.1V_{DD}$ (linear region).

Saturation Region (t_{f1})

In this region, the drain current is constant:

$$I_D = \frac{\beta_n}{2}(V_{DD} - V_{tn})^2$$

The current through the capacitor is:

$$I_D = -C_L \frac{dV_O}{dt} \Rightarrow \frac{dV_O}{dt} = -\frac{\beta_n}{2C_L}(V_{DD} - V_{tn})^2$$

Integrating from $V_O = 0.9V_{DD}$ to $V_O = V_{DD} - V_{tn}$:

$$\int_0^{t_{f1}} dt = -\int_{0.9V_{DD}}^{V_{DD}-V_{tn}} \frac{2C_L}{\beta_n(V_{DD} - V_{tn})^2} dV_O$$

$$t_{f1} = \frac{2C_L}{\beta_n(V_{DD} - V_{tn})^2}\left(0.9V_{DD} - (V_{DD} - V_{tn})\right)$$

Linear Region (t_{f2})

Here, the nMOS is in the linear (triode) region, and the current is:

$$I_D = \beta_n \left[(V_{DD} - V_{tn})V_O - \frac{V_O^2}{2} \right]$$

Equating with the capacitor current:

$$-C_L \frac{dV_O}{dt} = \beta_n \left[(V_{DD} - V_{tn})V_O - \frac{V_O^2}{2} \right]$$

Rewriting:

$$\frac{dV_O}{(V_{DD} - V_{tn})V_O - \frac{V_O^2}{2}} = -\frac{\beta_n}{C_L} dt$$

Integrating from $V_O = V_{DD} - V_{tn}$ to $V_O = 0.1V_{DD}$:

$$\int_{V_{DD}-V_{tn}}^{0.1V_{DD}} \frac{dV_O}{(V_{DD} - V_{tn})V_O - \frac{V_O^2}{2}} = -\frac{\beta_n}{C_L} \int_0^{t_{f2}} dt$$

This integral evaluates to:

$$t_{f2} = \frac{2C_L}{\beta_n(V_{DD} - V_{tn})} \left[V_{DD} - V_{tn} - 0.1V_{DD} \right]$$

Total Fall Time

Adding both terms:

$$t_f = t_{f1} + t_{f2}$$

$$t_f = \frac{2C_L}{\beta_n(V_{DD} - V_{tn})^2} (0.9V_{DD} - V_{DD} + V_{tn}) + \frac{2C_L}{\beta_n(V_{DD} - V_{tn})} (V_{DD} - V_{tn} - 0.1V_{DD})$$

Assuming $V_{tn} = 0.2V_{DD}$:

$$t_f \approx \frac{4C_L}{\beta_n V_{DD}}$$

This final result is a good approximation for hand analysis and clearly shows the dependence of fall time on load capacitance, mobility, and supply voltage.

4.2 Rise Time Determination

When the input to a CMOS inverter goes from high to low, the pMOS turns ON and the nMOS turns OFF. The output voltage rises from 0 to V_{DD} through the pMOS, charging the load capacitor C_L.
As before, rise time can be divided into two regions:

$$t_r = t_{r1} + t_{r2}$$

where:

- t_{r1}: V_O rises from $0.1V_{DD}$ to $V_{DD} - |V_{tp}|$ (pMOS in saturation),
- t_{r2}: V_O rises from $V_{DD} - |V_{tp}|$ to $0.9V_{DD}$ (pMOS in linear).

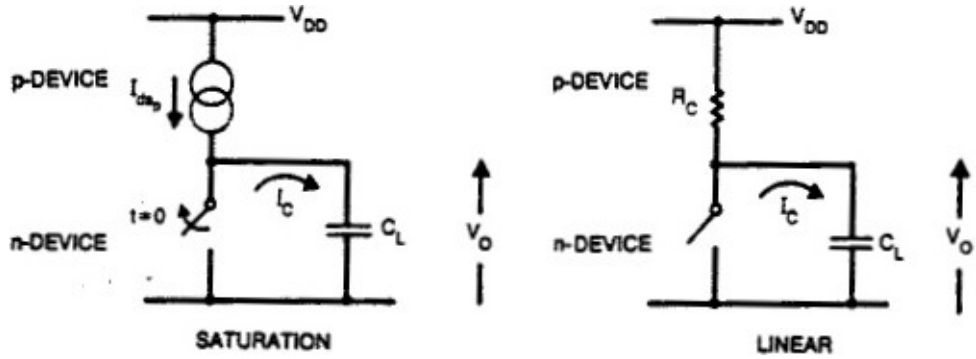

Figure 18: Equivalent circuits for rise time determination

Saturation Region (t_{r1})

In saturation, the drain current of the pMOS is:

$$I_D = \frac{\beta_p}{2}(V_{DD} - |V_{tp}|)^2$$

From the capacitor charging equation:

$$I_D = C_L \frac{dV_O}{dt} \quad \Rightarrow \quad \frac{dV_O}{dt} = \frac{\beta_p}{2C_L}(V_{DD} - |V_{tp}|)^2$$

Since this is constant:

$$\int_0^{t_{r1}} dt = \int_{0.1V_{DD}}^{V_{DD}-|V_{tp}|} \frac{2C_L}{\beta_p(V_{DD} - |V_{tp}|)^2} dV_O$$

$$t_{r1} = \frac{2C_L}{\beta_p(V_{DD} - |V_{tp}|)^2}\left[V_{DD} - |V_{tp}| - 0.1V_{DD}\right]$$

$$t_{r1} = \frac{2C_L}{\beta_p(V_{DD} - |V_{tp}|)^2}(0.9V_{DD} - |V_{tp}|)$$

Linear Region (t_{r2})

In the linear region, the pMOS current is:

$$I_D = \beta_p\left[(V_{DD} - |V_{tp}|)V_O - \frac{V_O^2}{2}\right]$$

From the capacitor charging equation:

$$C_L \frac{dV_O}{dt} = \beta_p\left[(V_{DD} - |V_{tp}|)V_O - \frac{V_O^2}{2}\right] \quad \Rightarrow \quad \frac{dV_O}{(V_{DD} - |V_{tp}|)V_O - \frac{V_O^2}{2}} = \frac{\beta_p}{C_L}dt$$

Integrating from $V_O = V_{DD} - |V_{tp}|$ to $V_O = 0.9V_{DD}$:

$$\int_{V_{DD}-|V_{tp}|}^{0.9V_{DD}} \frac{dV_O}{(V_{DD} - |V_{tp}|)V_O - \frac{V_O^2}{2}} = \frac{\beta_p}{C_L}\int_0^{t_{r2}} dt$$

As before, using approximation for fast hand analysis:

$$t_{r2} = \frac{2C_L}{\beta_p(V_{DD} - |V_{tp}|)}(0.9V_{DD} - V_{DD} + |V_{tp}|) = \frac{2C_L}{\beta_p(V_{DD} - |V_{tp}|)}(-0.1V_{DD} + |V_{tp}|)$$

Total Rise Time

Adding both parts:

$$t_r = t_{r1} + t_{r2}$$

$$t_r = \frac{2C_L}{\beta_p(V_{DD} - |V_{tp}|)^2}(0.9V_{DD} - |V_{tp}|) + \frac{2C_L}{\beta_p(V_{DD} - |V_{tp}|)}(|V_{tp}| - 0.1V_{DD})$$

Assuming $|V_{tp}| = 0.2V_{DD}$:

$$t_r \approx \frac{4C_L}{\beta_p V_{DD}}$$

Comparison with Fall Time

Since $\beta_n = 2\beta_p$ for equally sized transistors (due to $\mu_n \approx 2\mu_p$), then:

$$t_r = 2 \times t_f$$

Hence, to **equalize rise and fall times**, we must make:

$$\beta_p = \beta_n \quad \Rightarrow \quad W_p \approx 2W_n$$

Thus:
- Rise time is slower than fall time unless pMOS is made wider.
- The difference arises due to lower mobility of holes (μ_p) compared to electrons (μ_n).

4.3 Delay Time

In a CMOS digital circuit, the **gate delay** is the time taken by the output to respond to a change in input. This delay is mainly dominated by the time it takes to charge or discharge the output load capacitor C_L, which corresponds to the rise time (t_r) and fall time (t_f), respectively.

Rising and Falling Propagation Delays

The propagation delay during a rising transition is defined as:

$$t_{dr} = \frac{t_r}{2}$$

This corresponds to the average time taken for the output voltage to transition from low to high (e.g., from $0.1V_{DD}$ to $0.9V_{DD}$), typically measured at the 50% point of the output voltage swing.

Similarly, the propagation delay during a falling transition is:

$$t_{df} = \frac{t_f}{2}$$

Average Gate Delay

To characterize a gate's delay independent of the direction of the signal transition, we define the **average delay** τ_{av} as the average of the rising and falling propagation delays:

$$\tau_{av} = \frac{t_{df} + t_{dr}}{2} = \frac{t_f + t_r}{4}$$

This quantity τ_{av} is widely used in delay modeling of CMOS gates in digital circuit design.

Interpretation

- τ_{av} depends on the transistor parameters (β_n, β_p), supply voltage V_{DD}, and load capacitance C_L.
- A higher C_L increases delay.
- Using wide transistors (higher W/L) improves (reduces) delay by increasing β.
- For **balanced design**, designers often size pMOS wider than nMOS (e.g., $W_p = 2W_n$) to equalize t_r and t_f, minimizing τ_{av}.

Example using Approximate Formulas

If:

$$t_f \approx \frac{4C_L}{\beta_n V_{DD}}, \quad t_r \approx \frac{4C_L}{\beta_p V_{DD}}$$

Then:

$$\tau_{av} = \frac{t_f + t_r}{4} = \frac{1}{4}\left(\frac{4C_L}{\beta_n V_{DD}} + \frac{4C_L}{\beta_p V_{DD}}\right) = \frac{C_L}{V_{DD}}\left(\frac{1}{\beta_n} + \frac{1}{\beta_p}\right)$$

This expression clearly shows how **CMOS delay is affected by load capacitance, supply voltage, and transistor sizing**.

5 CMOS Gate Transistor Sizing

5.1 Similar Stage Loads

To achieve approximately equal rise and fall times in a CMOS inverter, it is necessary to size the pMOS transistor larger than the nMOS transistor:

$$W_p \approx 2W_n$$

where:

- W_p: Channel width of the pMOS transistor
- W_n: Channel width of the nMOS transistor

This sizing compensates for the lower mobility of holes in the pMOS device.

Implications:

- Increased layout area
- Increased dynamic power dissipation.

Minimum-Size Devices in Cascaded Structures:

In cascaded logic structures, using minimum-size devices (i.e., $W_p = W_n$) does not necessarily degrade the switching response. This is illustrated using an inverter pair.

Delay Analysis:

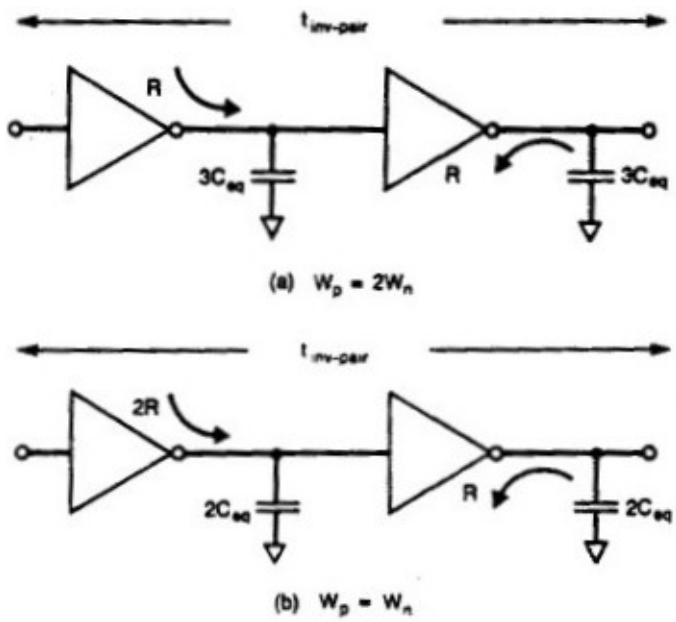

Figure 19: CMOS Inverter pair timing response

Case 1: $W_p = 2W_n$ (as shown in Fig.(a))

$$t_{\text{inv-pair}} = t_{\text{fall}} + t_{\text{rise}} = 3RC + 3RC_{\text{eq}} = 6RC_{\text{eq}}$$

Case 2: $W_p = W_n$ (as shown in Fig.(b))

$$t_{\text{inv-pair}} = 4RC_{\text{eq}} + 2RC_{\text{eq}} = 6RC_{\text{eq}}$$

where:

- R: Effective 'on' resistance of a unit-sized nMOS transistor
- $C_{\text{eq}} = C_g + C_d$: Total capacitance of a unit-sized gate and drain

Conclusion: Both configurations result in similar delays. Hence, in cascaded stages, minimum-size inverters can be used without significantly affecting performance.

Effect on Inverter Threshold Voltage (V_{inv}):

The inverter threshold voltage is given by:

$$V_{\text{inv}} = \frac{V_{DD} + V_{tp} + V_{tn}\left(\sqrt{\beta_n/\beta_p}\right)}{1 + \sqrt{\beta_n/\beta_p}}$$

substitute:

- $V_{DD} = 5$ V, $\quad V_{tn} = 1$ V, $\quad V_{tp} = -1$ V

- $\beta \propto \mu \frac{W}{L}$ so β_n/β_p depends on W_p/W_n

Results:

- For $W_p = 2W_n$: $V_{\text{inv}} \approx 2.24$ V
- For $W_p = W_n$: $V_{\text{inv}} \approx 2.5$ V

Observation: Less than 10% variation in V_{inv}, which is acceptable in most designs. **Design Note:** It is usually preferable to use $W_p = W_n$ when cascading similar stages to optimize area and power.

5.2 Switching Performance of the Pseudo-nMOS Inverter

A simplified timing model of the pseudo-nMOS inverter is shown in figure below. This design uses a width ratio of 3:1 (nMOS to pMOS).

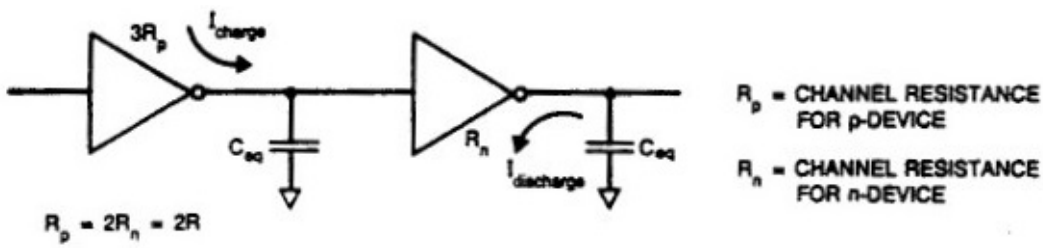

Figure 20: Pseudo-nMOS Inverter pair timing response

Delay for inverter pair:

$$t_{\text{inv-pair}} = 6R(C_g + 2C_d) + R(C_g + 2C_d) = 7R(C_g + 2C_d)$$

where $C_{\text{eq}} = C_g + 2C_d$.

5.3 Cascaded Stage Loads

When driving large capacitive loads such as:

- Long buses
- I/O buffers
- Pad drivers and off-chip loads

it is necessary to design cascaded driver stages.

Design Method:

1. Determine the final stage size based on desired rise/fall time and load capacitance C_L.
2. Determine the size and number of intermediate stages based on optimization goals (speed, power, area).

Stage Ratio:

- Defined as the ratio of transistor size between consecutive stages.
- Optimal speed is obtained when the stage ratio is approximately 2.7.
- Ratios between 2 and 10 are commonly used in practice.

6 Determination of Conductor Size

6.1 Electromigration

- Electromigration refers to the movement of metal ions in a conductor due to the passage of direct current (DC).
- This phenomenon results from the modification of normally random atomic diffusion to a directional process driven by the momentum transfer from electrons (charge carriers) to metal atoms.

Effects of Electromigration:

- Deformation of metal conductors
- Creation of voids and hillocks
- Potential failure of interconnects and circuitry

Key Factors Affecting Electromigration:

- **Current density** (J)
- **Temperature**
- **Crystal structure** of the metal

6.2 Minimum Conductor Size Estimation

When designing power conductors, especially V_{DD} and V_{SS} lines, it is critical to keep the current density below threshold values to prevent electromigration-induced failures.

Electromigration Threshold Example:

For a 1μm thick aluminum line, the limiting current density is:

$$J_{Al} \approx 1 - 2\text{mA}/\mu\text{m}$$

As a conservative design rule:

$$J \approx 0.5 \text{ mA}/\mu\text{m to } 1.0 \text{ mA}/\mu\text{m}$$

should be used for power supply lines to avoid electromigration issues.

Current Crowding and Constrictions:

- If a conductor has a constriction, metal atoms tend to migrate more rapidly in that region due to increased current density.
- This leads to local weakening and eventual failure—similar to a fuse blowing.

6.3 Voltage Drops (IR Drops)

- Another reason for ensuring adequate conductor sizing is the voltage drop (IR drop) that can occur during charging transients.
- These can cause improper functioning if V_{DD} or V_{SS} falls below critical limits.

Note: Although electromigration typically sets the *minimum* width, IR drop considerations often determine the *actual* width required in practical design.

6.4 Alternative Techniques for Power Distribution:

When increasing conductor width is not feasible:

- Add extra V_{DD} and V_{SS} supply pins
- Use multiple distributed power paths

6.5 Current Density in Window Cuts

- Special attention must be given to the current density at window (cut) edges.
- It must be kept below:

$$J_{\text{cut}} \leq 0.1 \text{ mA}/\mu\text{m}$$

- Due to current crowding effects near window peripheries, a chain of small, well-spaced windows can provide similar current carrying capability as one long narrow window.
- This technique reduces peak current density and mitigates electromigration risk.

7 Power Consumption

In CMOS circuits, the total power dissipation arises from two primary components:

1. **Static dissipation** — due to leakage current
2. **Dynamic dissipation** — due to:
   - Switching transient currents
   - Charging and discharging of load capacitances

7.1 Static Dissipation

- Consider a complementary CMOS gate as shown in figure below:

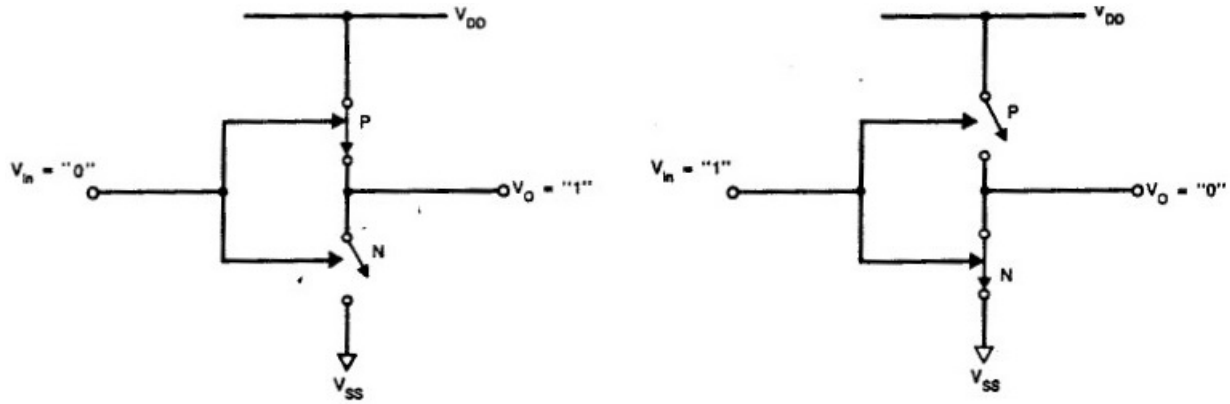

Figure 21: CMOS inverter states for static dissipation calculations

- When the input is at logic '0', the nMOS is OFF and the pMOS is ON, pulling the output to V_{DD}.
- When the input is logic '1', the nMOS is ON and the pMOS is OFF, pulling the output to ground (V_{SS}).
- In both states, one transistor is OFF, and there is no direct current path from V_{DD} to V_{SS}.
- Hence, under ideal conditions, the quiescent current and power dissipation are zero.
- However, there exists a small leakage current due to reverse-biased junctions between the diffusion regions and the substrate.
- A model illustrating these parasitic diodes in a CMOS inverter is shown in figure below:

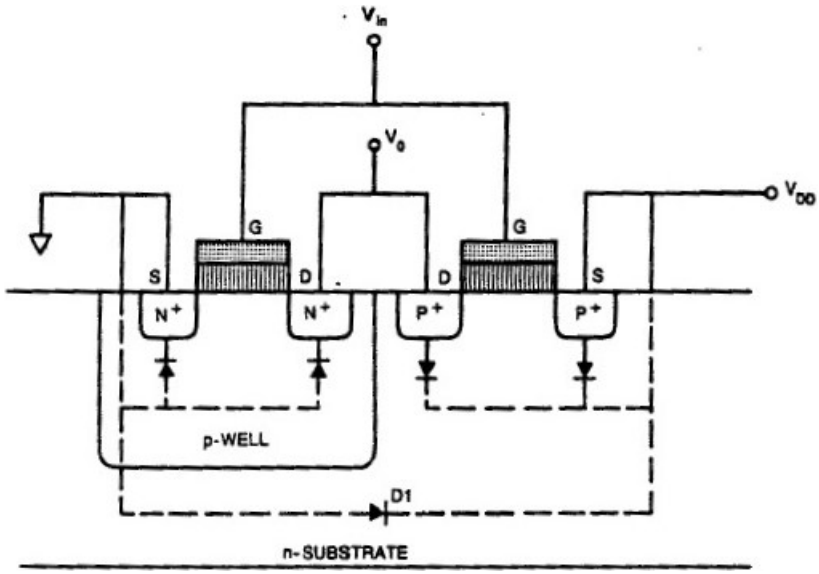

Figure 22: Model describing parasitic diodes

- The diode D_1 models leakage from the p-well to substrate.
- The reverse-biased leakage current is modeled by the diode equation:

$$i_0 = i_s \left(e^{\frac{qV}{kT}} - 1 \right)$$

  where:

  - i_s = reverse saturation current
  - V = voltage across the diode
  - q = electronic charge
  - k = Boltzmann's constant
  - T = temperature (in Kelvin)

- The static power dissipation is given by:

$$P_s = \sum_{1}^{n} (\text{leakage current} \times V_{DD})$$

  where n = number of devices

- For example, typical static power dissipation due to leakage for an inverter operating at 5 volts is between 1—2 nano-watts.

7.2 Dynamic Dissipation

- When the output switches states (either from '0' to '1' or '1' to '0'), both nMOS and pMOS devices conduct for a brief interval.
- This causes a short-duration current pulse from V_{DD} to V_{SS}.
- Additionally, current is drawn to charge and discharge the load capacitance, which is typically the dominant component of dynamic power.
- This short-circuit power dissipation is important in I/O buffer design and is influenced by gate design and capacitance.
- Assuming a step input with rise/fall times much smaller than the repetition period, the average dynamic power dissipation for a square-wave input with frequency $f_p = \frac{1}{t_p}$ (as shown in figure below) is:

$$P_d = C_L V_{DD}^2 f_p$$

  where:

  - C_L = load capacitance
  - V_{DD} = supply voltage
  - f_p = switching frequency

- This equation shows that dynamic power is proportional to both the capacitance and the square of the supply voltage, and it increases linearly with frequency.
- Note that it is independent of transistor parameters.

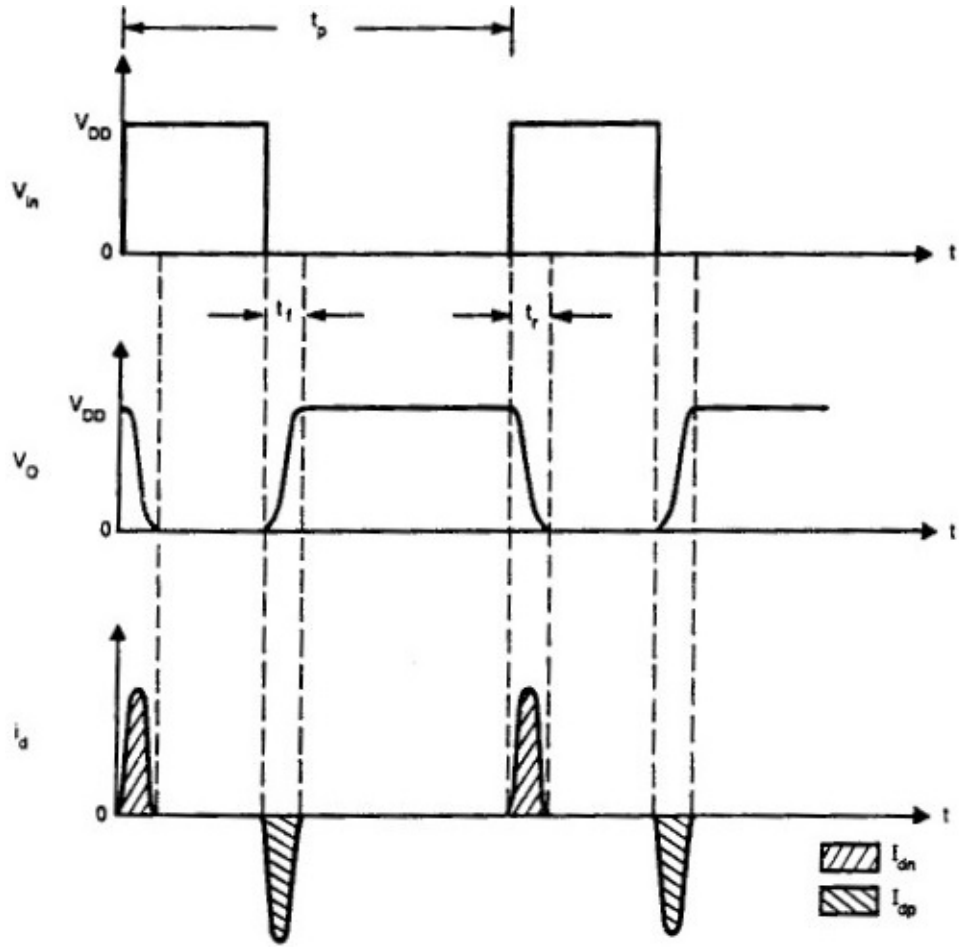

Figure 23: Waveforms for determination of dynamic power dissipation

Total Power Dissipation

The total power consumed by a CMOS circuit is the sum of the static and dynamic components:

$$P_{\text{total}} = P_s + P_d \tag{4.41}$$

7.3 Design Considerations

When estimating power dissipation:

- Group all capacitances that operate at a given frequency.
- Sum the contributions from each group to estimate total dynamic power.
- Use the total dynamic power to size V_{DD} and V_{SS} conductors appropriately, minimizing IR drops.

This consideration becomes increasingly important in large-scale CMOS designs.

Example: Power Dissipation in CMOS Inverter Array

Given:

- Number of inverters = N
- Operating frequency = 10 MHz
- $V_{DD} = +5\,\text{V}$
- Output capacitance = $2C_d$, where $C_d = 40\,\text{fF} \Rightarrow 2C_d = 80\,\text{fF}$
- Input capacitance = $2C_g$, where $C_g = 11.2\,\text{fF} \Rightarrow 2C_g = 22.4\,\text{fF}$

Solution:

- Total capacitance per inverter:

$$C_{\text{total}} = 2C_d + 2C_g = 80\,\text{fF} + 22.4\,\text{fF} = 102.4\,\text{fF}$$

- Dynamic power per inverter:

$$P_d = C_{\text{total}} \cdot V_{DD}^2 \cdot f_p = 102.4 \times 10^{-15} \cdot 25 \cdot 10^7 = 2.56 \times 10^{-5}\,\text{W}$$

- Total dynamic power for N inverters:

$$P_{d,\text{total}} = N \cdot 2.56 \times 10^{-5}\,\text{W}$$

- Static power (estimated leakage of 0.5 nW per gate):

$$P_s = N \cdot 0.5 \times 10^{-9}\,\text{W}$$

- Total power:

$$P_{\text{total}} \approx N \cdot (2.56 \times 10^{-5} + 0.5 \times 10^{-9})\,\text{W}$$

This example illustrates that dynamic power dominates static power in typical CMOS circuits.

8 Charge Sharing

In many digital CMOS circuits, especially during dynamic logic or bus operations, **charge sharing** is a critical consideration for maintaining signal integrity.

Charge Sharing Model

- A bus can be modeled as a capacitor C_b, as shown in figure below.
- Often, a signal from this bus is sampled via a switching element connected to another capacitor C_s.
- This configuration can be analyzed by modeling the pre- and post-switching charge conditions.

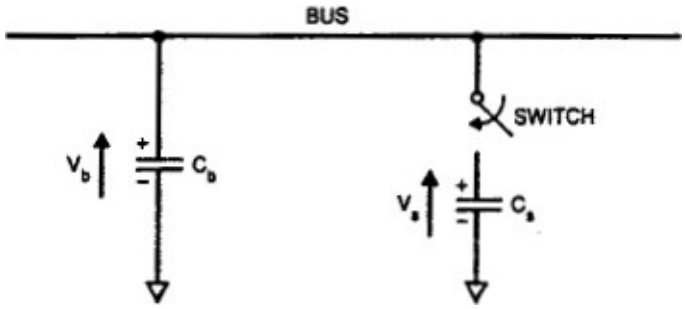

Figure 24: Charge sharing mechanism

Initial Conditions

Before the switch is closed:

$$Q_b = C_b V_b, \quad Q_s = C_s V_s$$

Total initial charge:

$$Q_T = C_b V_b + C_s V_s$$

Total capacitance after switching:

$$C_T = C_b + C_s$$

Final Voltage After Sharing

Once the switch closes, the charge redistributes, and both capacitors settle at a common voltage V_R:

$$V_R = \frac{Q_T}{C_T} = \frac{C_b V_b + C_s V_s}{C_b + C_s}$$

Special Case: $V_s \approx 0$

Assuming $V_b = V_{DD}$ and $V_s \approx 0$, the resulting voltage becomes:

$$V_R = V_{DD} \cdot \frac{C_b}{C_b + C_s}$$

This shows that V_R is reduced compared to V_{DD}, and the amount of drop depends on the ratio C_s/C_b.

Design Guideline

To ensure reliable signal transfer from C_b to C_s, it is essential to maintain:

$$C_b \geq 10 \cdot C_s$$

This minimizes the voltage drop due to charge sharing and preserves logic levels in sampling operations.

Understanding Charge Sharing: A Simple Analogy

In digital circuits, sometimes we store voltage (like information) on a bus line, which acts like a big capacitor C_b. Another circuit part may want to sample that information using a smaller capacitor C_s through a switch (see the figure). This process is called **charge sharing**.

Think of it like this:

- C_b is a **big water tank** with water level V_b,
- C_s is a **small water tank** with level V_s,
- A switch is like a **valve** that connects the two tanks.

What happens when the valve is opened (switch closed)?

- Water (charge) flows between the tanks until both have the **same level**.
- The final level (voltage) is in between the original levels and depends on both **volume (capacitance)** and **initial levels**.

The final voltage becomes:

$$V_R = \frac{C_b V_b + C_s V_s}{C_b + C_s}$$

Special case: If $V_b = V_{DD}$ and $V_s = 0$, then:

$$V_R = V_{DD} \cdot \frac{C_b}{C_b + C_s}$$

Problem: If C_s is too large, V_R becomes much smaller than V_{DD}, leading to unreliable logic levels.

Design Tip: To avoid this,

$$C_b > 10 \cdot C_s$$

This ensures the voltage remains close to the original bus value after sharing.

Key Idea: Sharing charge is like mixing water. Keep the sampling tank small to avoid changing the level too much!

9 Scaling of MOS Transistor Sizing

- As CMOS fabrication technology evolves, the dimensions of transistors are continually reduced to improve performance and increase packing density.
- Let us examine how reducing device dimensions affects circuit behavior, guided by a first-order "constant-field" scaling model proposed by Dennard et al.

9.1 Scaling Principles

- First-order MOS scaling theory assumes that the electric fields in the device are kept constant as dimensions are reduced.
- If all critical parameters—such as device dimensions (length L, width W, oxide thickness t_{ox}, and junction depth X_j), voltages (V_{DD}), and doping concentrations — are scaled by a factor $\alpha > 1$, then the key electrical properties of the device can still be preserved.
- The scaling is applied as follows:
  - All horizontal and vertical dimensions are scaled by $1/\alpha$.
  - Voltages are scaled by $1/\alpha$.
  - Doping concentrations are scaled by α.
- This approach results in a new device that is physically smaller, uses lower voltage, but maintains the same electric field intensities.
- The outcome of such scaling is illustrated in figure and table shown below.

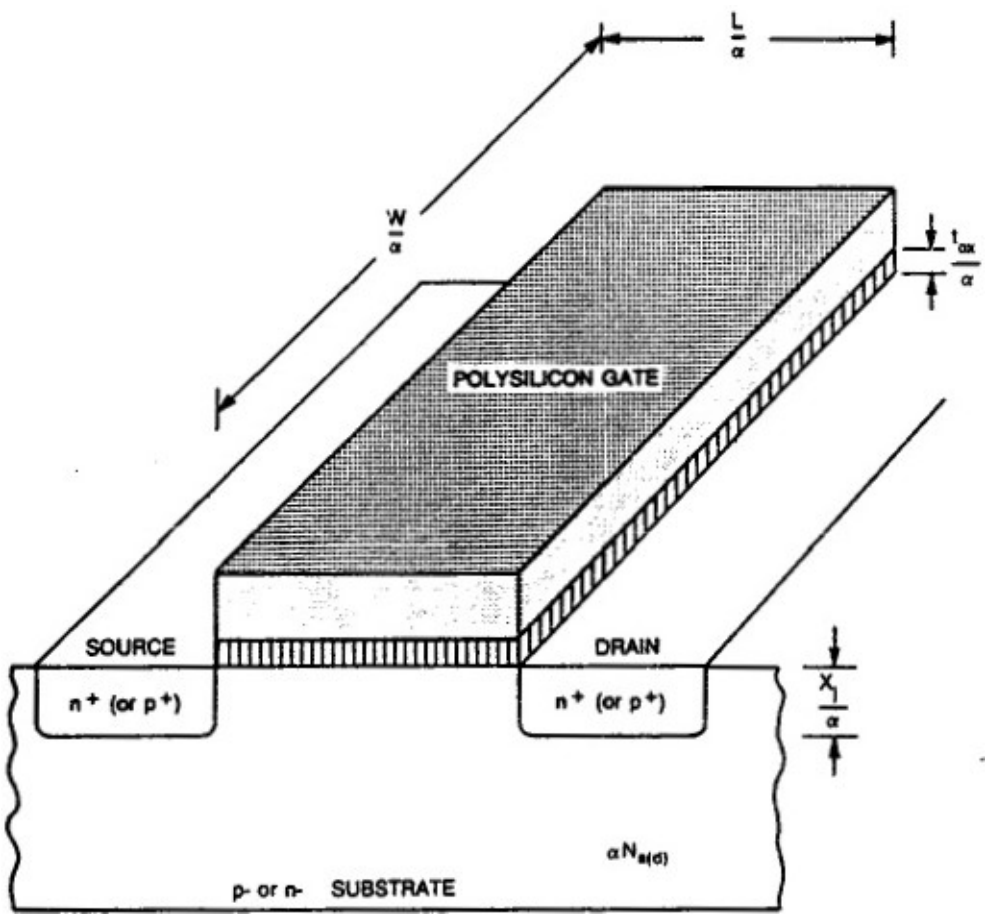

Figure 25: Basic scaled MOS device

Table 8: Influence of First-Order Scaling on MOS Device Characteristics

	Parameter	**Scaling Factor**
Device Parameters	Length L, Width W, Junction depth X_j	$1/\alpha$
	Gate oxide thickness t_{ox}	$1/\alpha$
	Substrate doping N_a or N_d	α
	Supply voltage V_{DD}	$1/\alpha$
	Electric field E	1 (Constant)
	Depletion layer thickness d	$1/\alpha$
	Parasitic capacitance $C = WL/t_{ox}$	$1/\alpha$
Resultant Influence	Gate delay (VC/I)	$1/\alpha$
	Static power P_s, dynamic power P_d	$1/\alpha^2$
	Power-speed product	$1/\alpha^3$
	Gate area A	$1/\alpha^2$
	Power density P/A	1 (Constant)
	Current density I/A	α
	Transconductance g_m	1 (Constant)

- The primary benefit of constant-field scaling is that nonlinear effects are minimized, making design more predictable.
- However, practical limits exist. For instance:
  - The depletion layer thickness d must reduce with L.
  - To reduce d, we increase doping concentration, which affects mobility.
  - Electric fields remain constant, reducing the risk of breakdown.
- One important rule is that the channel length must be larger than the sum of depletion widths from source and drain.
- To scale L down, the depletion width must be reduced by increasing the substrate doping.
- However, high doping reduces carrier mobility, increasing propagation delay.
- Scaling also affects current and power:
  - Drain current I_{ds} per transistor scales as $1/\alpha$.
  - Transistor density increases as α^2.
  - Current density increases as α.
  - Wider metal lines are needed to handle increased current.

Power Density Consideration:

- Though P_d per gate drops as $1/\alpha^2$, the number of gates increases as α^2, so overall power density remains constant.

Thermal Constraint:

- Let the maximum silicon junction temperature be $T_j = 175°\text{C}$ and ambient temperature $T_{amb} = 75°\text{C}$.
- For a 40-pin ceramic package with thermal resistance $\theta = 40°\text{C/W}$:

$$P_{max} = \frac{T_j - T_{amb}}{\theta} = \frac{175 - 75}{40} = 2.5 \text{ W}$$

  Beyond this, heat sinks or cooling may be required.

Practical Limitations:

- Mobility decreases slightly with increased doping.
- Delay reduction is less than the ideal $1/\alpha$.
- Power may reduce by more than $1/\alpha^2$.
- Power-speed product remains close to $1/\alpha^3$.
- Surface doping above 10^{19} cm^{-3} causes oxide breakdown before inversion.

As shown in figure below, oxide and junction breakdown limit scaling.

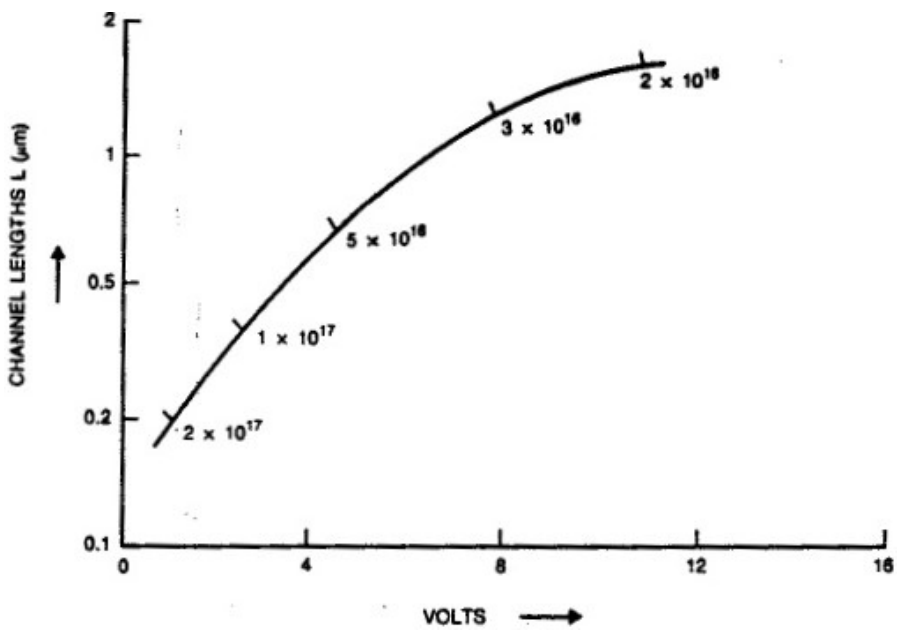

Figure 26: Relationship between channel length L, voltage and doping level (N)

Minimum channel length and maximum voltage are dictated by doping and breakdown constraints.

Memory Scaling Challenge:

- As diffusion areas reduce, stored charge becomes vulnerable to alpha particles.
- Radiation-hardened techniques or error detection become necessary.

9.2 Interconnect Layer Scaling

- While transistor performance improves with scaling, interconnect parameters degrade.
- For example, scaling width and thickness of metal lines by $1/\alpha$ reduces their cross-sectional area by $1/\alpha^2$.
- The line resistance becomes:

$$R' = \rho \frac{l}{A'} = \rho \frac{l}{A/\alpha^2} = \alpha^2 R$$

  So, R scales as α^2.
  Note: The wire length is not scaled as some global wires (e.g. clock, power, long signal paths) still need to cross similar-sized chips because chip functionality grows.

Analogy

Imagine squeezing a straw thinner and thinner, but not making it shorter. It becomes harder to blow through—not because it's longer, but because it's narrower.

Similarly, when we scale down the width and thickness of metal interconnects (like squeezing the straw), but keep their length the same, their resistance increases significantly—just like the air resistance in the narrow straw.

- If voltage is scaled down by $1/\alpha$, the voltage drop V_d along the interconnect (for constant chip size, i.e., unscaled l) increases by α.
- Similarly, line response time becomes:

$$\tau' = R'C' = \alpha RC \quad \text{(for fixed interconnect length)}$$

- Hence, for constant chip size:
  - Voltage drops increase.
  - Response time worsens.
  - Signal integrity and clock distribution become harder.

Table 9: Influence of Scaling on Interconnect Media

Parameter	Scaling Factor
Line resistance r	α^2
Line response rc	α
Normalized line response	α
Voltage drop V_d	α
Normalized voltage drop	α
Current density J	α
Normalized contact voltage drop	α

Key Issues:

- Higher current density leads to **electromigration**.
- New materials may be needed for metal layers.
- Capacitance of interconnect increases.
- Gates have less ability to drive long interconnects.

As shown in above table, the interconnection network becomes the bottleneck in performance. To mitigate this:

- Vertical dimensions are often kept constant.
- More metal layers are used.
- Interconnect-aware design techniques are employed.

10 Yield

- Yield is a critical factor in the manufacturing of VLSI (Very-Large-Scale Integration) circuits.
- Although yield is **not directly a performance parameter**, it significantly affects the **economic feasibility** of fabrication and is influenced by several factors:
  - Technology used in fabrication
  - Chip area
  - Layout strategy

Definition of Yield:

- Yield is defined as:

$$Yield(\%) = \frac{\text{No. of Good Chips on Wafer}}{\text{Total Number of Chips}} \times 100\%$$

- Yield depends primarily on the chip area (A) and the defect density (D) (number of lethal defects per cm^2).
- Two widely accepted models describe how yield relates to these parameters.

1. **Seed's Yield Model:** This model is used primarily when:
   - The chip area is large
   - The yield is expected to be less than 30%
   - The yield is expressed as:

$$Y = e^{-\sqrt{AD}} \tag{12}$$

   where

$$A = \text{chip area (in cm}^2\text{)}$$
$$D = \text{defect density (lethal defects/cm}^2\text{)}$$

As chip area increases or defect density rises, the exponent becomes more negative, causing yield to drop exponentially.

2. **Murphy's Yield Model:** This model is preferred when:

   - Chip area is relatively small
   - Yield is expected to be greater than 30%

   Murphy's model gives:

$$Y = \left[\frac{1 - e^{-AD}}{AD}\right]^2 \tag{13}$$

   This formulation softens the drastic yield drop for small areas, making it more accurate for high-yield conditions.

10.1 Observations and Insights

- Larger chip areas result in lower yield, due to the increased probability of a defect occurring anywhere in the chip.
- In extreme cases, entire wafers can be rendered useless if the chip area is large and defect density is high.
- Modern processes, such as dry etching, have improved defect densities. A typical value might be:

$$D \approx 4 \text{ defects}/cm^2$$

10.2 Improving Yield

- Redundancy can be built into chip designs, especially in memory circuits, to tolerate localized defects.
- In random logic circuits, adding redundancy often increases chip area and may not improve yield significantly.
- In contrast, memory arrays (which have a regular structure) can benefit greatly from techniques like spare rows or columns.